Specification For Approval

Customer : _____

Description : EC FAN

Customer Part No. : _____ Rev : ____

Delta Model No. : GTB019FUA07R-V E1 Rev : 02

Safety Model No. : GTB019FUA07

Sample Issue No. : _____

Sample Issue Date : 08/23/2019

Please send one copy of this specification back after you signed approval for production pre-arrangement

Approved by : _____

Date : _____

Delta Electronics, Inc.
No.252, Shangying Road, Guishan Industrial Zone, TEL : +886-3-359-1968
Taoyuan City, 33341, Taiwan FAX : +886-3-359-1991

Smarter. Greener. Together.

GTB019FUA07R-V E1

Electronically Commutated (EC) Fan

Centrifugal Fan

Ø 190 x 70 mm

Delta Electronics, Inc.
No.252, Shangying Road, Guishan Industrial Zone, Taoyuan City, 33341, Taiwan
TEL: +886-3-359-1968
FAX: +886-3-359-1991
www.deltaww.com

RoHS

Technical features

Input Side	
Nominal Voltage	1~ 230Vac 50/60Hz
Input Source	1~ 200Vac - 240Vac
Power @ Free air	85 W
Power @ Max. load	85 W
Output Side	
Speed (RPM)	3100
Qmax. (CMH / CFM)	754 / 443
Pmax. (Pa / inAq)	841 / 3.38
Noise (dB-A) @ Qmax.	70
Functions	
Control input 0-10VDC / PWM pattern.	
Output +10VDC (±10%), max. 5mA.	
Locked rotor protection, Soft start.	

Physical	
Rotation Direction	CW, Seen on rotor
Material (Impeller / Frame)	Plastic / Die-cast aluminum
Bearing system	Ball bearings
Weight (kg)	1.1
Electrical leads	Lead wire
Environmental	
Operating temperature range	-25 ~ +60 ℃
Storage temperature range	-40 ~ +80 ℃
Safety	
Safety	UL; cUL; TUV
IP Level	IP54
EMC	EN61000-6-1/3 EN61000-3-2/3
Protection class	I
Insulation class	B
Leakage current	<= 3.5 mA
Motor protection	Over temperature protected
Life expectance	60,000 hrs at 40 ℃ / 15 ~ 65 %RH

NOTE: Delta reserves the right to change specifications and other product information without prior notice.

Copyright © 2019 Delta Electronics, Inc. All rights reserved

P & Q curves

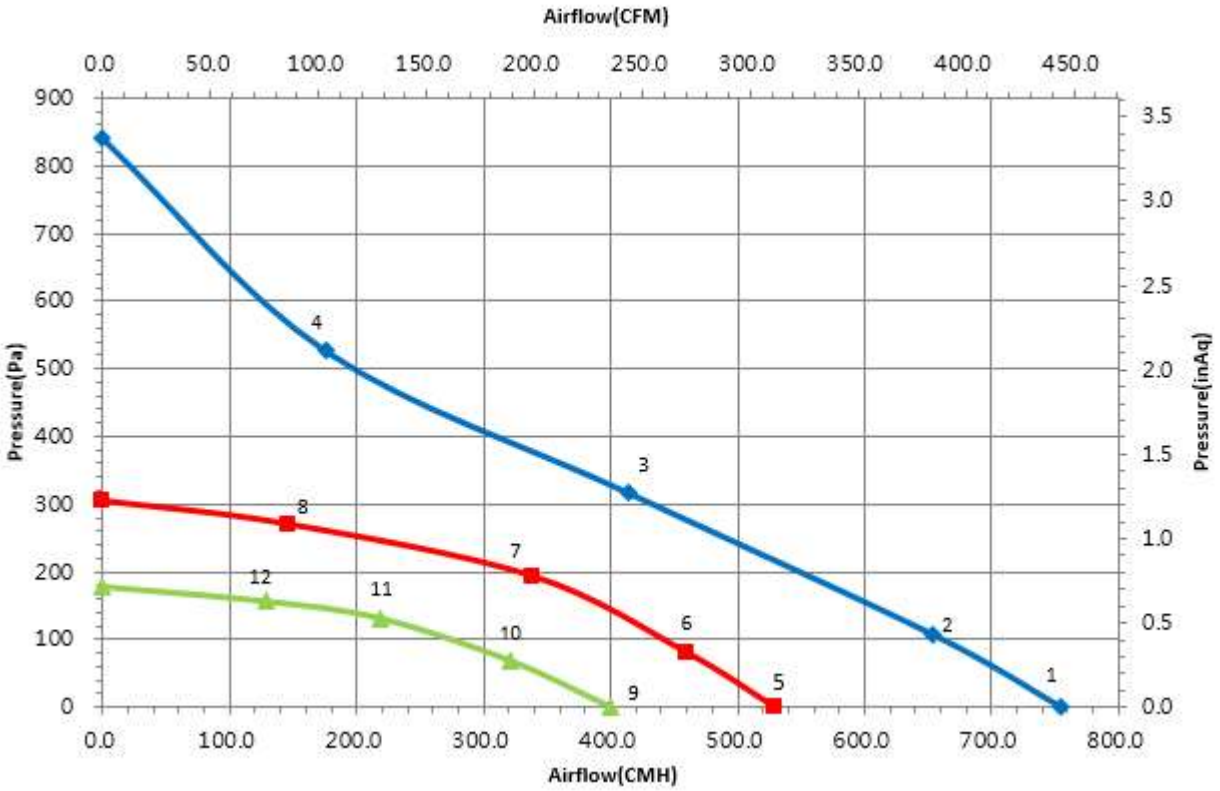

Measure data:

	P [Pa]	Q [CMH]	N [R.P.M.]	P1 [W]	I [A]	Lp [dB(A)]
1	0	754	3554	82	0.63	70
2	107	653	3366	82	0.63	68
3	317	413	3107	82	0.63	63
4	526	176	3474	82	0.63	69
5	0	529	2504	30	0.29	62
6	81	459	2493	35	0.33	60
7	193	339	2493	41	0.37	58
8	270	146	2493	32	0.31	59
9	0	400	1904	14	0.15	57
10	69	320	1903	18	0.19	54
11	131	219	1900	19	0.19	53
12	156	128	1905	16	0.17	53

Test Condition：

- Input Voltage: Nominal Voltage
- Temperature : Room Temperature
- Humidity : 65%RH
- Measured with inlet cone.
- Noise (Lp) is measured at a distance of one meter from the inlet side
- Testing method is compliance with ISO 3745.

Copyright © 2019 Delta Electronics, Inc. All rights reserved

Dimension drawing

Label :

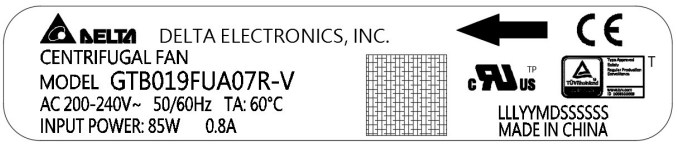

Fan :

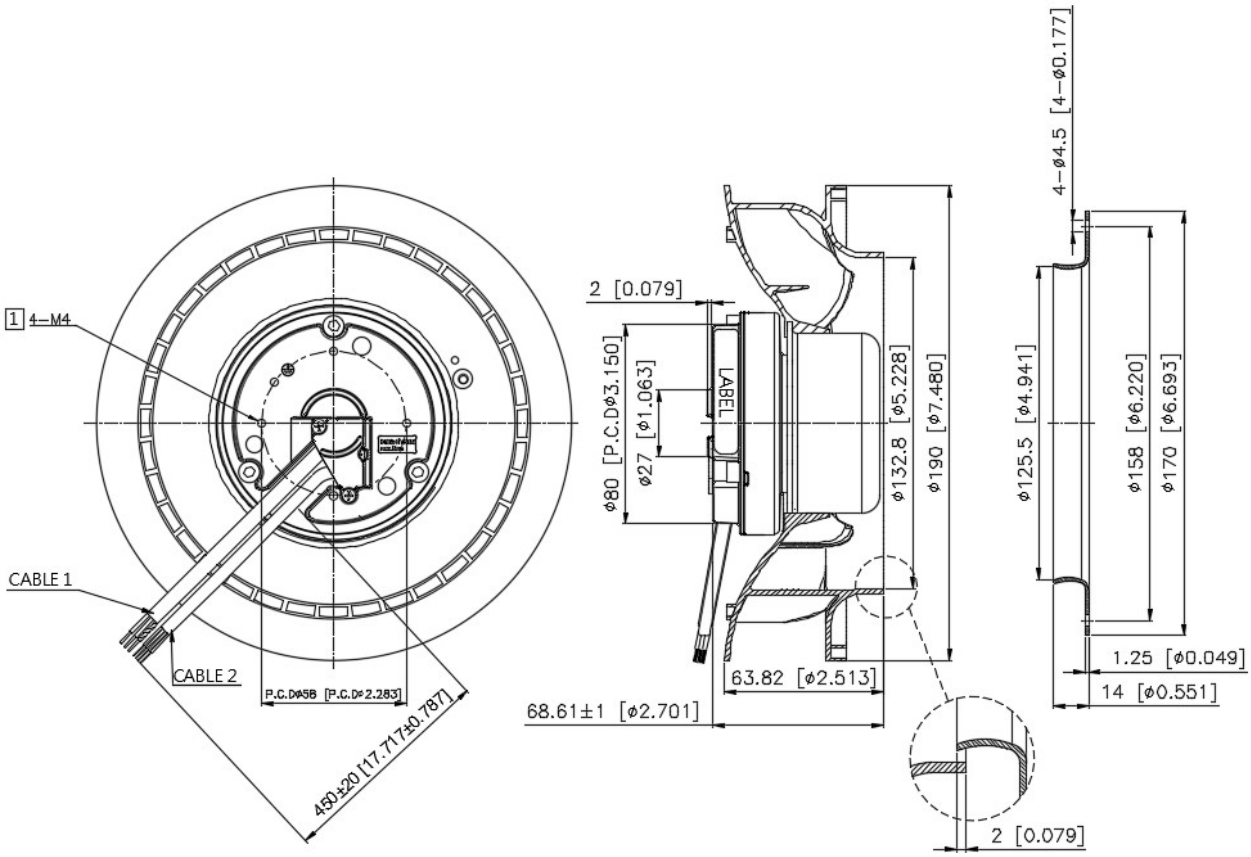

Note :

1. Depth of screw max. 5mm.

UNIT : mm[INCH]

Copyright © 2019 Delta Electronics, Inc. All rights reserved

Definition of terminal block

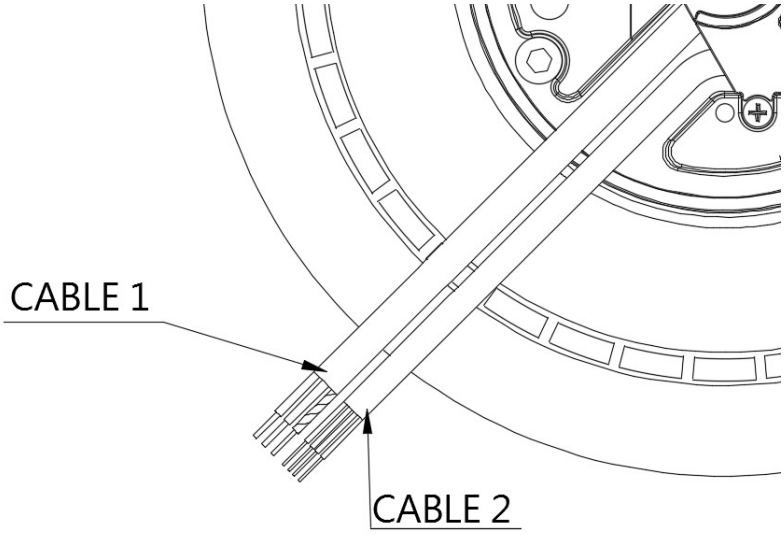

Cable	Wire Type	Color	Functions
1	UL2464 18#AWG	Brown	Line/ AC main
		Blue	Neutral/AC main
		Green / Yellow	Protective Earth
2	UL2464 24#AWG	Green	Ground
		Red	+10V output
		White	F00
		Yellow	0-10VDC / PWM

Copyright © 2019 Delta Electronics, Inc. All rights reserved

Lead wire connection:

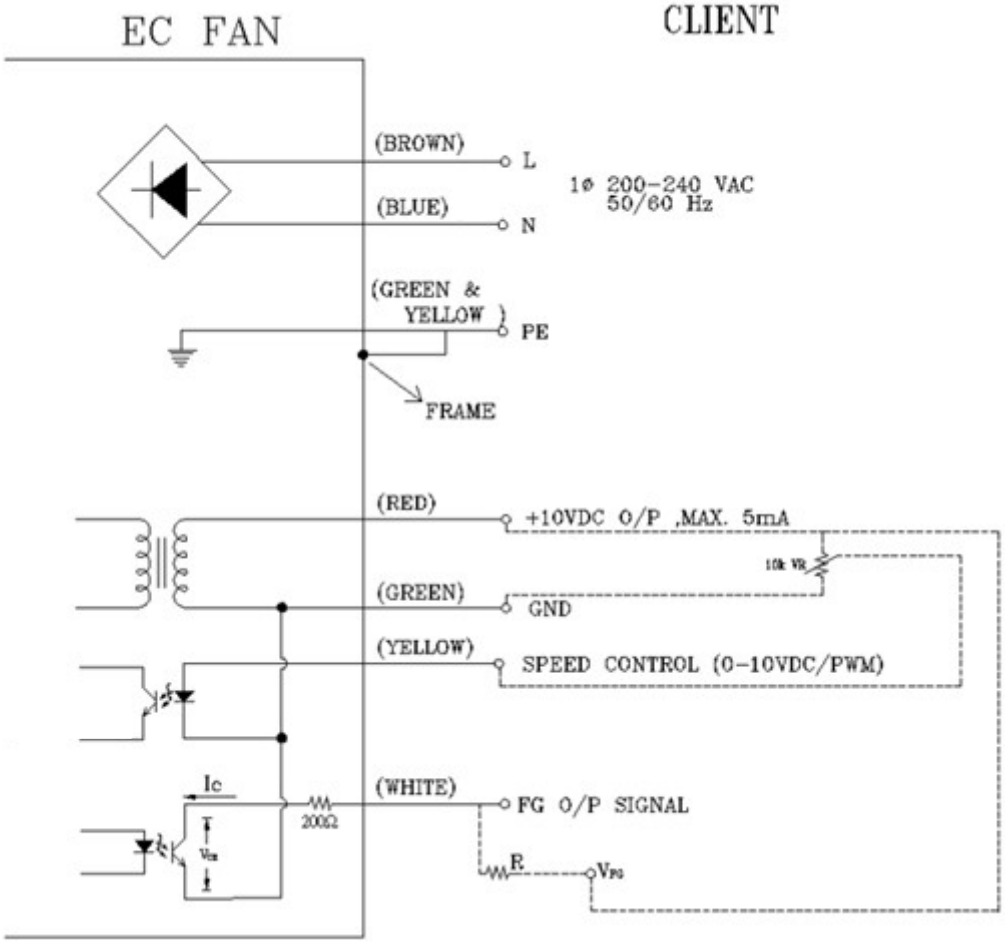

Copyright © 2019 Delta Electronics, Inc. All rights reserved

Speed setting	
Full Speed 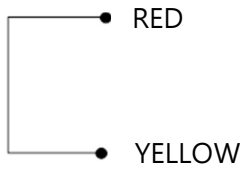 	**Short RED & YELLOW** Fan will run full speed.
Voltage Control 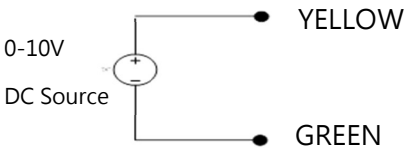 	**Use voltage source support 0~10VDC voltage** DC+ : connect to YELLOW DC - : connect to GREEN -Voltage higher than 1.0 VDC, fan start up. -Voltage lower than 0.5 VDC , fan stop
PWM Control 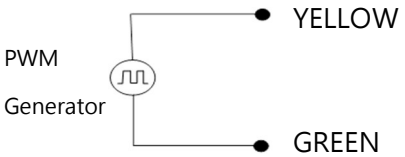 	**PWM duty control** PWM amplitude is 10VDC(+-5%) Frequency Range is 100Hz ~ 100kHz -PWM duty higher than 10%, fan start up。 -PWM duty lower than 5%, fan stop。

Signal function	
Voltage/PWM control	The speed comparison will control level. Voltage (V) / PWM(%) / Speed (RPM) (REF) 0 / 0 / 0 1 / 1 / 420 ± 50RPM 10 / 99 / 3100(1)±5% (1) Depending on power consumption conditions, speed might be different.
FG	**V_{CE}(sat) = 0.8V MAX.** **V_{FG} = 30.0V MAX.** **I_C = 5mA MAX.** **R ≥ V_{FG} / I_C** **Frequency generator waveform** 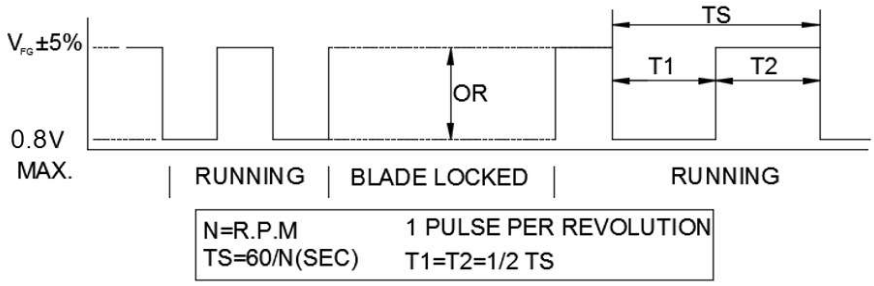

Copyright © 2019 Delta Electronics, Inc. All rights reserved

Control Voltage VS. RPM Curve

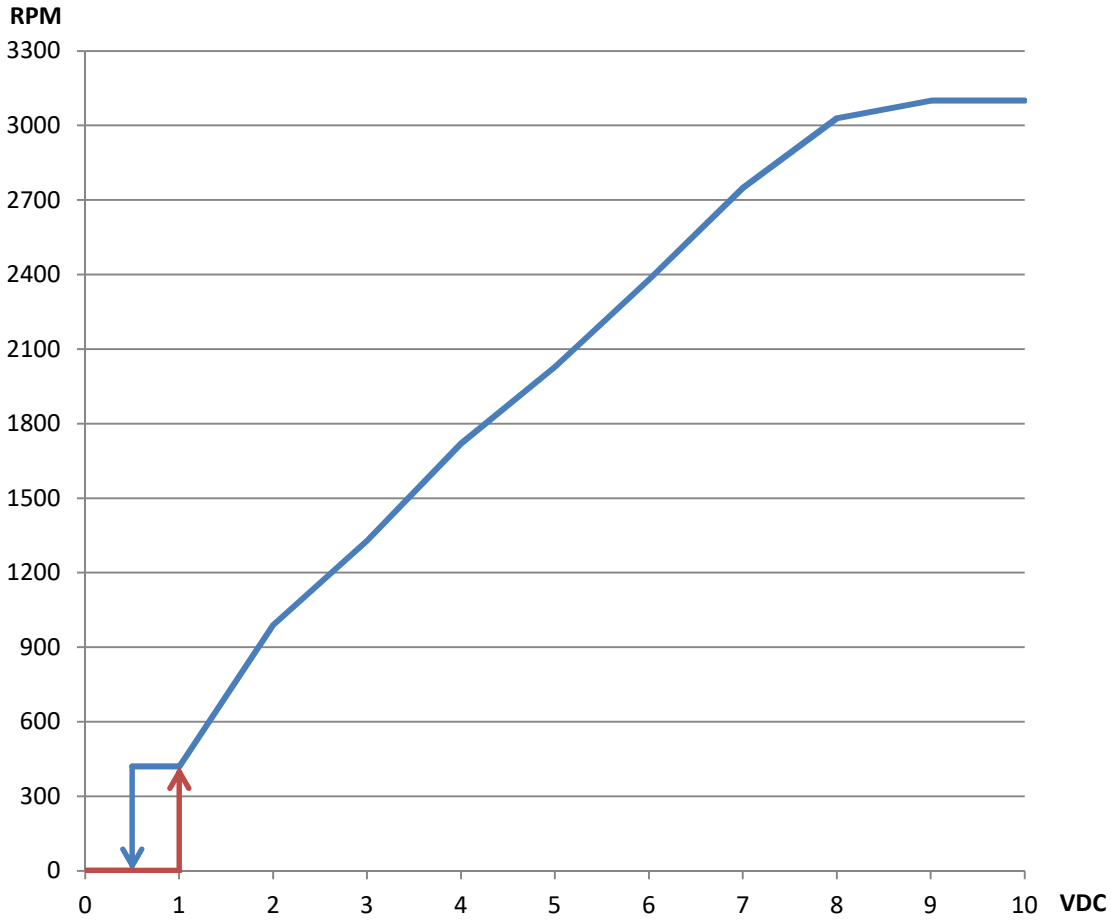

Voltage (VDC), PWM duty (%) table

Voltage	0	0.5	1	1.5	2	3	4	5	6	7	8	9	10	VDC
PWM duty	0	5	10	15	20	30	40	50	60	70	80	90	100	%

Note: If the fan is used on heavy load, the speed will be limited by power consumption.

Copyright © 2019 Delta Electronics, Inc. All rights reserved

Protection Standard

ITEM	Standard
Rain	IEC 60529 IPX4
Dust/sand	IEC 60529 IP5X
Gas corrosion	GR-63-CORE
Salt mist	IEC 60068-2-11

FAN MATERIAL:

① Blades: Plastic (PA6+30%GF)

② Rotor: Steel

③ Pillow: Polyester (BMC)

④ Bottom Cover: Die-cast aluminum

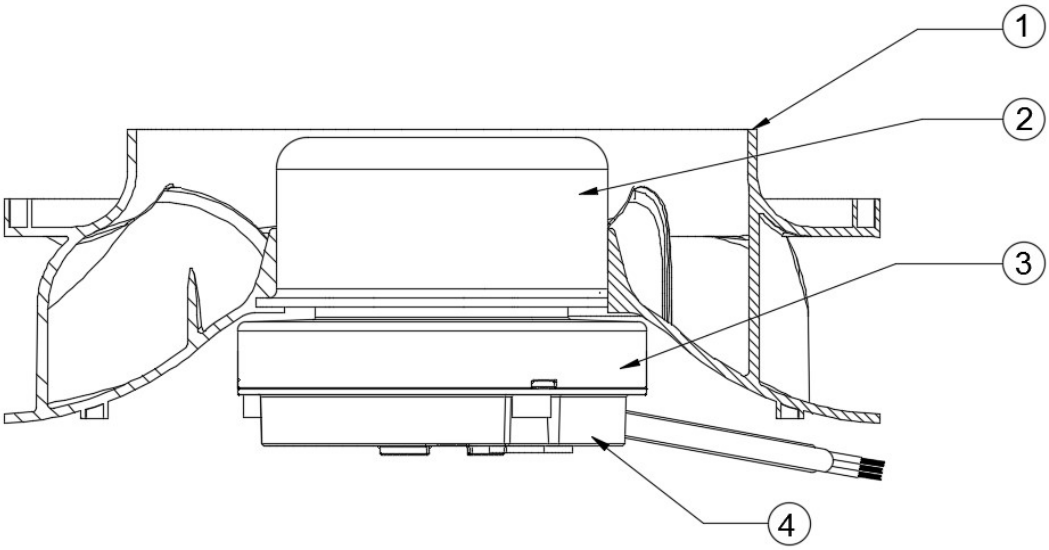

Copyright © 2019 Delta Electronics, Inc. All rights reserved